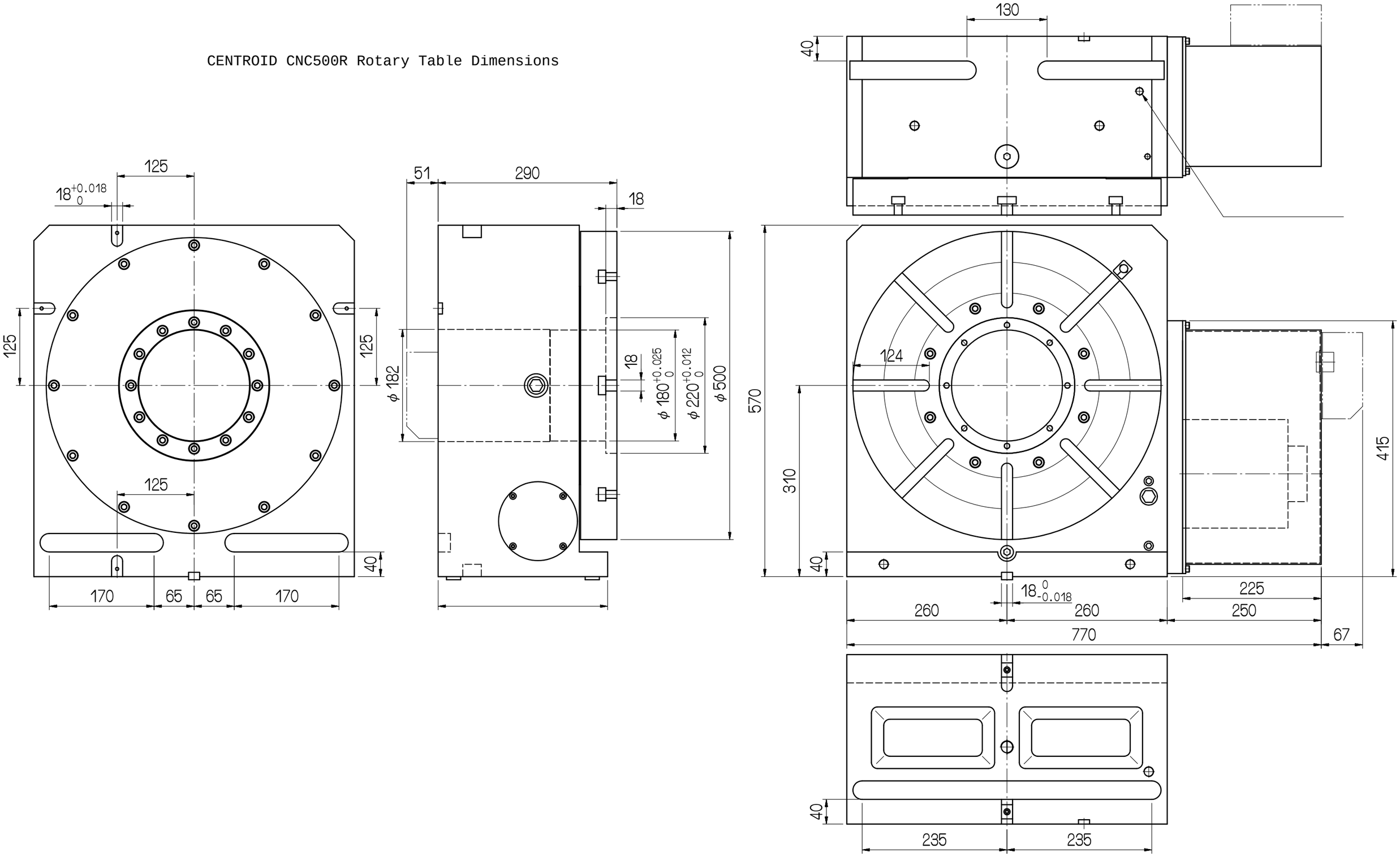CENTROID CNC500R Rotary Table Dimensions